barkpark™

A PLAYCORE Company

Model # BARK-474

SAFETY WARNINGS & EQUIPMENT INSPECTION

- Owners and installers please note these safety warnings and make use of this checklist on a regular basis.
- Follow installation instructions when erecting equipment.
- Ground surfaces around equipment should be restored as needed. Concrete footings should never be exposed. Surface depth should comply with ASTM and CPSC specifications.
- Check for and repair damage caused by wear or vandalism, a major factor in injury causing situations.
- All protruding bolts should be covered or cut off and finished smooth. Sharp edges on pipes should be capped or removed. Check for bent, broken, or severely worn pipe, and replace.
- All equipment should be free of rust and repainted whenever necessary to deter rusting.
- We provide our customers with layout sheets and installation instructions. Please keep on file the specifications sheet that contains the listing of every part used.
- Never add components not intended for use with this product.
- Regular maintenance is necessary in this and all park and recreational equipment to insure the safety of the user.
- Note: Proper maintenance of equipment requires regular tightening of all bolts, nuts, and setscrews.
- Note: Regular checking of all parts, castings, etc. should be made. If a part is broken or worn, it should be replaced immediately.
- Check to be sure all fittings are tight and that bars and pipes do not move.
- Replace all worn S-hooks. S-hooks must be completely closed. Failure to close S-hooks can result in serious injury to the user. NEVER reuse S-hooks.
- Test for free movement of swing hanger and other moving attached parts.
- Check for worn chains and replace them.
- A soft resilient surface should be placed under all swings extending at least twice the height of the top rail both front and back.

HARDWARE

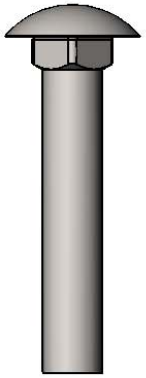

5/16" x 1-3/4"
Carriage Bolt

5/16" x 1"
Machine Bolt

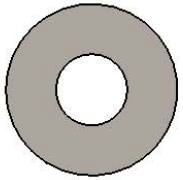

5/16" Washer

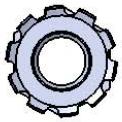

5/16" Kep Nut

TOOLS REQUIRED

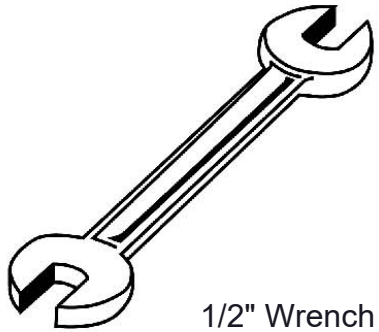

1/2" Wrench

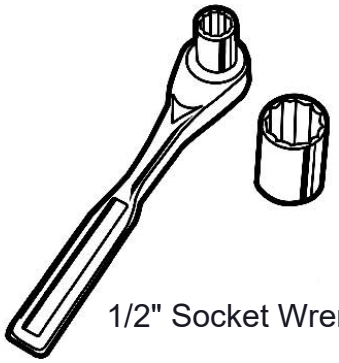

1/2" Socket Wrench

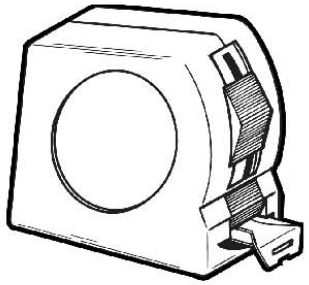

Tape Measure

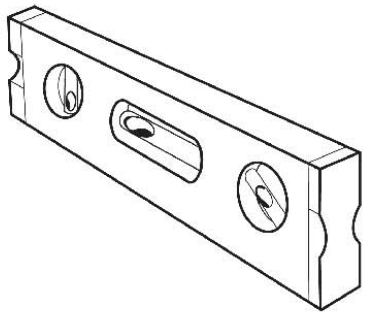

Level

BARK- 474
PICK UP STATION WITH LEASH HOLDER

Bag Box Coating: Electrostatic powder coat, oven cured.

Material: 20 gauge aluminum precision cut with formed edges and revited together. Attached lock.

Posts: 14 gauge formed channel.

Leash Holder: Fabricated from 5/8" steel bar and 10 gauge steel plate. All electrically MIG welded.

Leash Holder Coating: Oven fused functionalized polyethylene copolymer-based thermoplastic. Fluidized bed coating application with superior mechanical performance, impact resistance and UV-stability.

Hardware: 2 boxes of 200 count bags. 400 bags total. Zinc Hardware.

COMPONENTS

BLUE COLOR OPTION

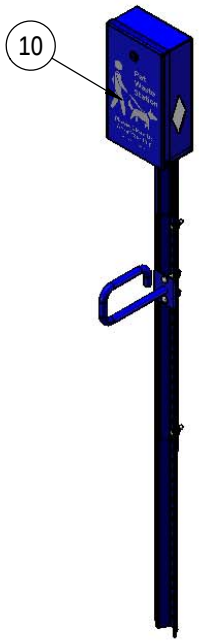

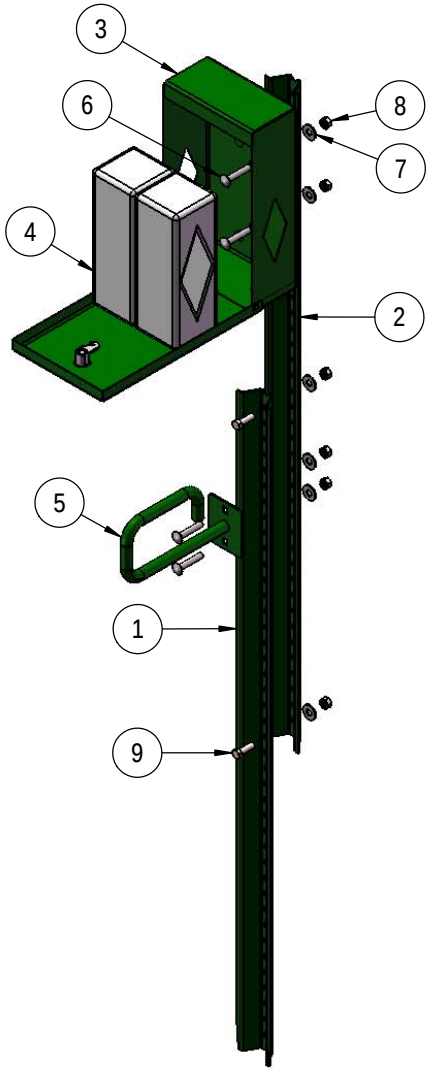

ITEM NO.	PartNo	DESCRIPTION	Qty.
1	P-01-08-0105(Green Unit) P-01-08-0202(Blue Unit)	Pet waste station post bottom	1
2	P-01-08-0104(Green Unit) P-01-08-0201(Blue Unit)	Pet Waste Station Post Top	1
3	P-01-08-0095	Assembled Bag Box	1
4	01-08-0074	Pet Waste Station Bags	2
5	T-01-08-0272	bark-474 Leash holder Assembly	1
6	33-06-0025	5/16" x 1-3/4" Carriage Bolt	4
7	33-02-0001	5/16" Zinc Plated Washer	6
8	33-03-0016	5/16" Kep Nut (zinc)	6
9	33-05-0001	5/16" x 1" Machine Bolt (Zinc)	2
10	01-08-0282	Pet Waste Station Decal	1

STEP 1

Attach the Top and Bottom Post together. Then attach the Bag Box and the Leash Hanger using the specifed hardware.

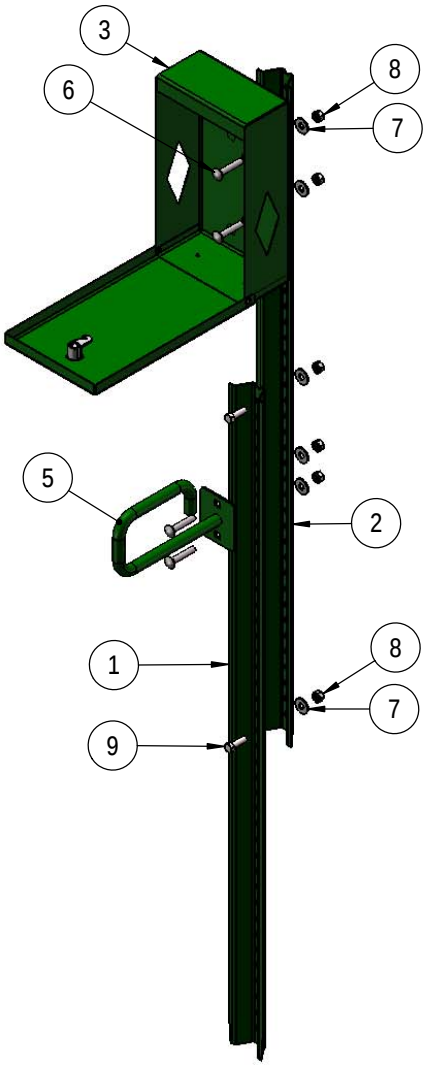

FOOTING

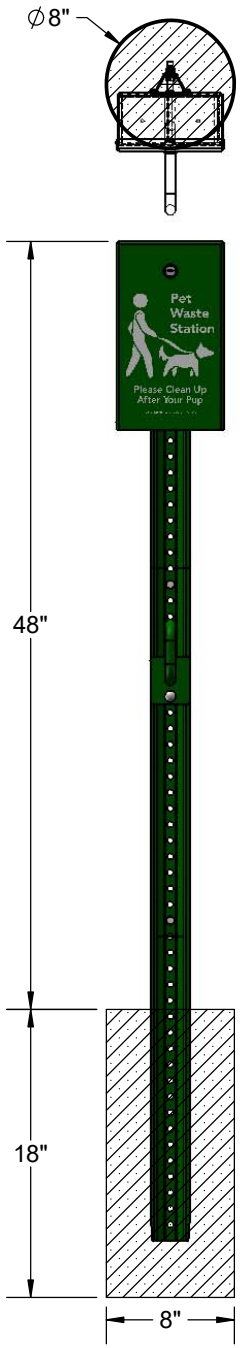

Estimated Required Concrete
2 - 50lb Bags of Concrte Mix
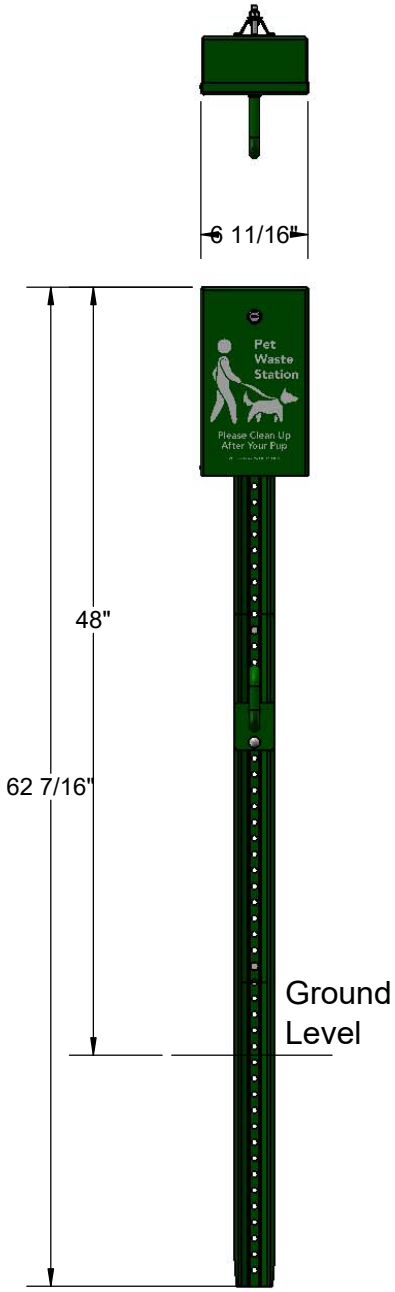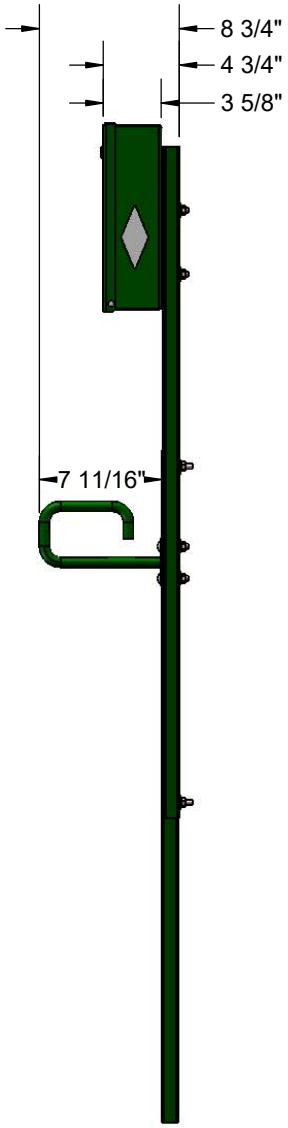
OVERALL DIMENSIONS